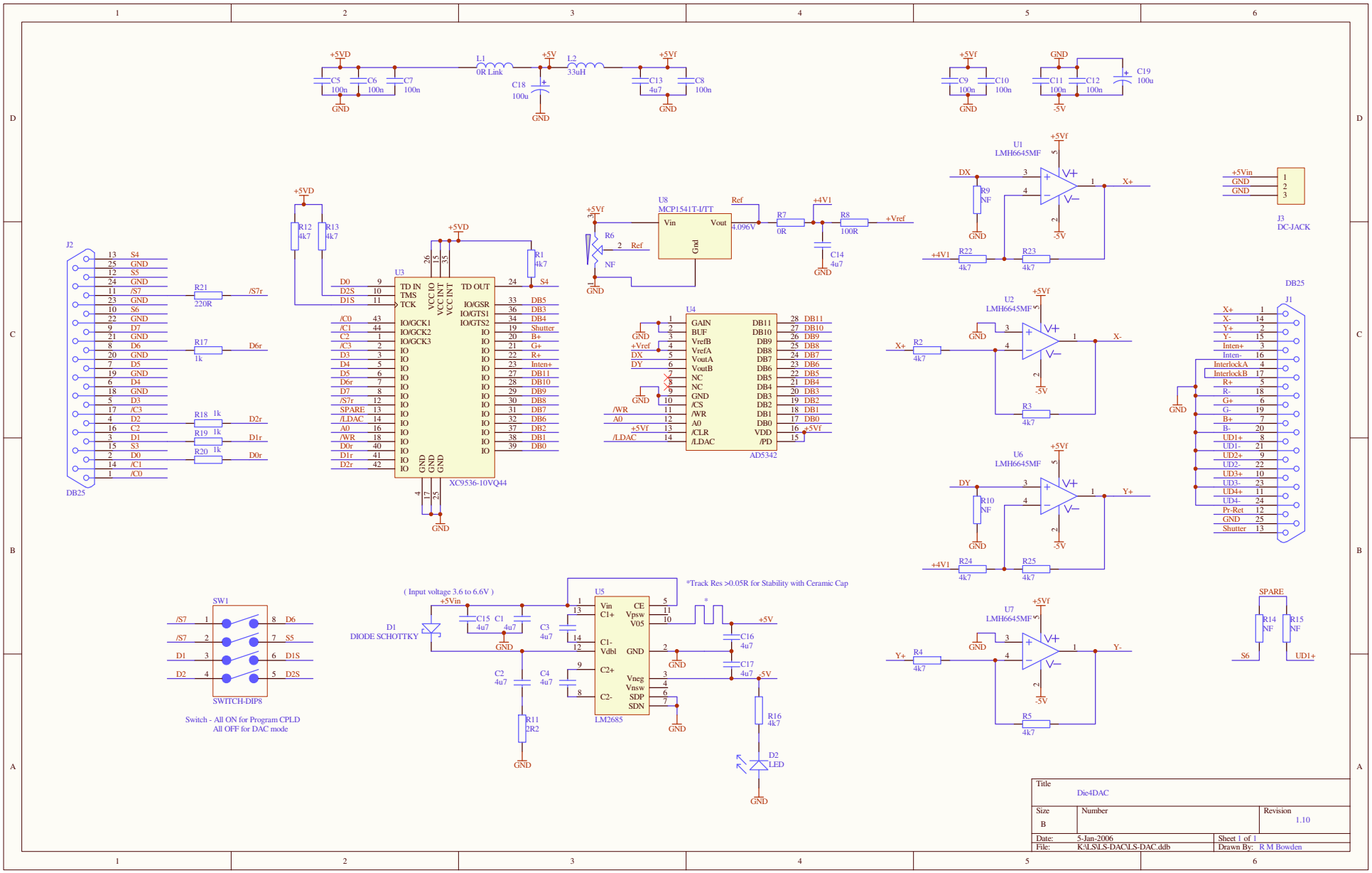

Title	Die4DAC		
Size B	Number		Revision 1.10
Date: 5-Jan-2006		Sheet 1 of 1	
File: K:\LS\LS-DAC\LS-DAC.ddb		Drawn By: R M Bowden	